MegaSig

V1.2 20261124

WT 108 中型程控风噪源

产品规格书

WT 108 Medium-sized Programmable Wind Noise Source

Product Specification

产品规格书-中文 1
Product introduction-EN 3

从此文件发布日期起，在此发表的是当前或者拟定的信息。由于我们会不断对产品进行改进和增加特征此出版物中的信息如有变动恕不另行通知。

From the date of this document's release, the information published here is current or proposed. As we will continuously improve and add features to our products, the information in this publication is subject to change without further notice.

最终版权所有（c）深圳市美格信测控技术有限公司
Copyright (c) Shenzhen MegaSig Measurement And Control Technology CO LTD.

产品简介



WT 108中型程控风噪源

WT 108是一款专门针对风噪测试而设计的风噪发生器，支持通过PC机操控。

整机采用金属结构，牢固稳定、内部零件符合RoHS要求，高速风源附带堵转、热保护、过流保护、软启动保护措施。

功能特点

- 风速可调范围大，风速输出稳定
- 风噪低，最高风速下噪声小于70dBA
- 体积小，方便搭建测试环境，可定制固定支架
- 兼容程控操作与单机操作

规格参数

整体参数	
风速范围(m/s)	9-32
调节精度(m/s)	0.5
工作噪音(最大风速)	≤70dBA
最大输入功率(W)	700
程控接口	DB9
工作环境温度	-25°C~60°C
工作湿度	5%~90%
出风口尺寸L*W (mm)	130*100
裸机尺寸L*W*H(mm)	950*470*390.5

外观尺寸图

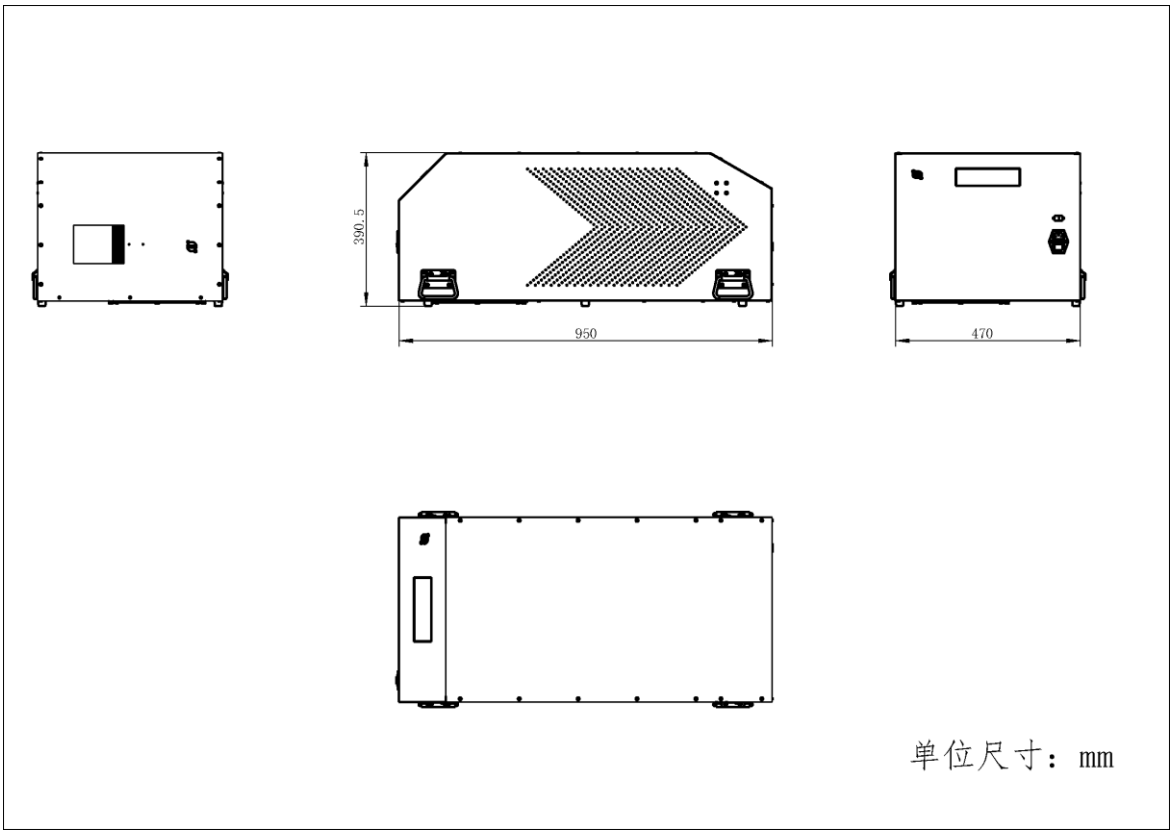

在无深圳市美格信测控技术有限公司优先书面授权书前提下，此出版物任何一个部分不可通过任何形式进行复制、修改和翻译。对于非法复制、修改和翻译商业行为，将根据国家知识产权相关法律追求其法律责任。

深圳市美格信测控技术有限公司
0755.8950.8393
sale@megasig.com
中国, 深圳,光明
www.megasig.com

Product introduction



WT 108 Medium-sized Programmable Wind Noise Source

The WT 108 is a wind noise generator specifically designed for wind noise testing, supporting control via a PC.

The entire unit features a metal structure, ensuring robustness and stability. Internal components comply with RoHS requirements. The high-speed wind source is equipped with protective measures including stall protection, thermal protection, overcurrent protection, and soft-start protection.

Features

- Wide adjustable wind speed range with stable output
- Low wind noise; noise level below 70 dBA at maximum wind speed
- Compact size for easy test setup; customizable mounting bracket available
- Compatible with both programmable (PC-controlled) and standalone operation

Specification parameters

Parameters	
Wind speed range (m/s)	9-32
Adjustment precision (m/s)	0.5
Operating noise (Maximum Wind Speed)	≤70dBA
Maximum input power (W)	700
Programmable control interface	DB9
Operating temperature	-25°C~60°C
Operating humidity	5%~90%
Outlet size L*W (mm)	130*100
Overall dimensions L*W*H(mm)	950*470*390.5

Dimension（unit: mm）

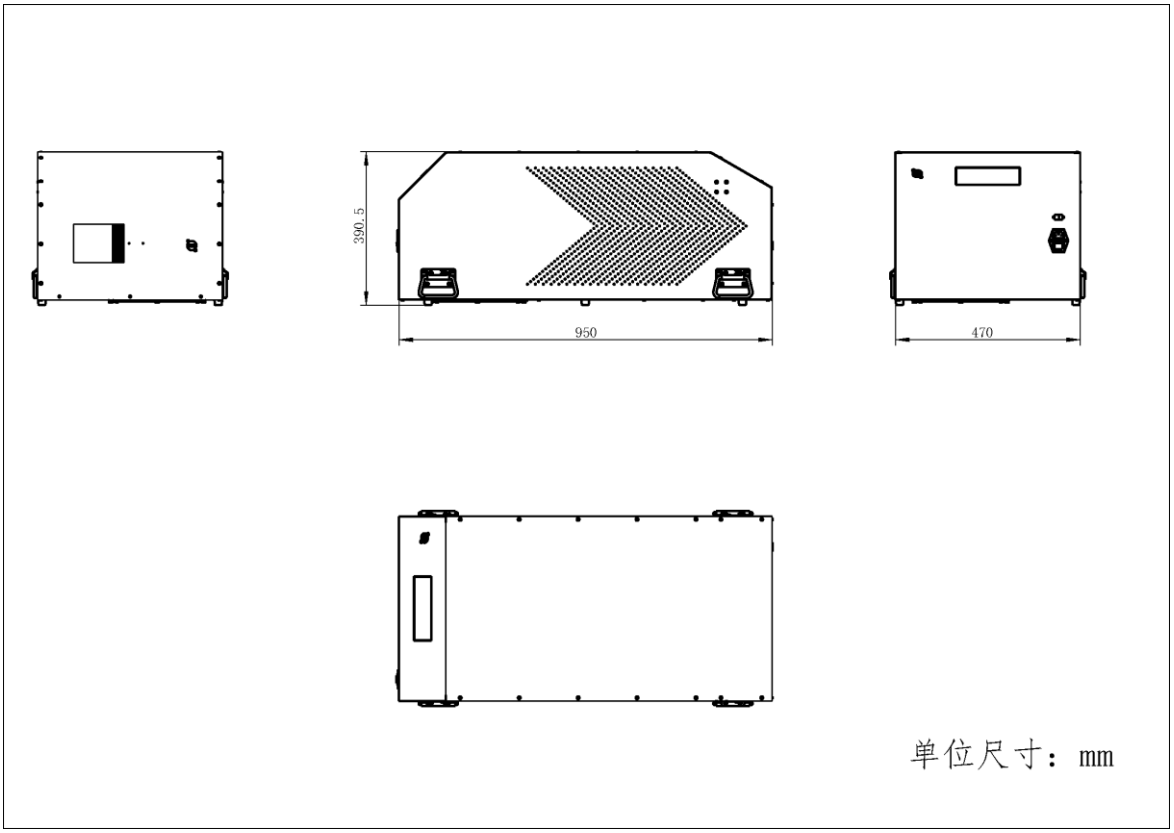

Without the prior written authorization of Shenzhen MegaSig Measurement And Control Technology CO LTD. no part of this publication may be reproduced, modified or translated in any form. Legal liability will be pursued in accordance with the national laws on intellectual property rights for commercial activities involving illegal reproduction, modification or translation.

Shenzhen MegaSig Co., Ltd.
0755.8950.8393
sale@megasig.com
GuangMing, Shenzhen,China
www.megasig.com